Digital Communication Technologies EXPERTISE Journal

DİJİTAL YAŞAM

September 2016 • Issue: 15

special edition

Cenk ŞEN:
Türksat, CEO

"Türksat, in its own field, aims to place among the top 10 satellite operators in the world."

University - Industry Cooperation

What is this HDR & UHD Premium?

the Future of the OTT Applications!

ISSN 2149-8636
9 770214 986360

alpsat DVB S2 DVB T2 DVB C
Signal Meter Devices

ALPSAT AS06-STC

- DVB-S/S2/T/T2/C Measurement
- Analog T/T2/C Measurement
- Excellent Measurement Accuracy
- Fta HD&SD TV image
- Professional and Real Spectrum
- S2 Cross Polarization
- S2 Package TP Control
- S/S2/T/T2/C Consellation Diagram
- S/S2/T/T2/C Spectrum Measurement
- S2 Diseqc Port Scan
- CBR, VBR, MR, PR Measurement
- C / N, SNR, Offset Measurement
- dBuV, dBm, dBmV Levels
- Diseqc 1.0 - 1.1 - 1.2 Motor
- USALS and UNICABLE supports
- With Shock Resistant Silicone Case
- SONY Tuner Chipset
- T/T2/C Channel Plan
- T/T2/C User Channel Plan
- T/T2/C Limit Measurement
- T/T2/C Tilt Screen
- Analog T/C Delta Rate
- DVB T/T2/C Video Image
- 3.5 " High Resolution LCD
- 5V, 13V, 18V, 21V / 500 mA
- 32 LNB Type
- 8000 Channel Memory
- Large Fonts Osd UI
- Night Visible Keypad
- Video & Audio Input
- 3 Hours Lit-Poly Battery Time
- Win98/Xp/7/8/10- 32&64 Bit Support

SATFINDER 5 HD SLIM

- DVB-S & DVB-S2 measurment
- Hd & Sd measurment
- Excellent Measurement Accuracy
- Monitoring Fta HD & SD Tv
- Professional Real-Time Spectrum
- Cross Polarisation Measurement
- Package Search
- Constellation Screen
- Diseqc Port Scan
- Ber, C / N, Offset Measurement
- dBuV, dBm, dBmV levels
- Diseqc 1.0 - 1.1 - 1.2
- 10-Language Support
- ST Tuner Chipset
- 3.5 " High-Resolution LCD
- 13v, 18v, 21V / 650 mA
- 32 different LNB Type
- Supports Unicable & Usals
- Diseq-C 1.0/1.1/1.2 Motor
- 8000 Channel Capacity
- Large Fonts Special Menu
- Gold Plated Main Board
- Phosphorous Keypad
- External Video and Audio Input
- Lit-Poly Battery Time 3 hours
- Win98/Xp/7/8 32-64 Bit Support

AS01-HD SLIM

- Measuring DVB-S2
- Power Supply via STB
- 13 / 18V Supply Input
- Fast Satellite Finder
- Precision Level Views
- The software can be update
- Frequency Table Update
- 16 Satellite Memory
- Automatic Frequency Selection
- 30 Lnb Type
- Compatible Quattro Lnb
- Lightweight and small
- Installers for Hobbies Antenna
- Antenna Installers for Caravan

ALPSAT Elektronik Ltd.Co. Turkey
Add: Perpa Tic. Merkezi A.Blok K8 No:1092 Okmeydanı / Istanbul - Turkiye
Tel: +90 212 2228550 E-mail: info@alpsat.com Web: www.alpsat.com
Germany: Rantex Warenhandels GmbH
Add: Owiesenkehre 1 , 22177 Hamburg - Germany Tel.: +49 (0)40 450 370 70

alpsat

Hayrettin ÖZAYDIN
Chairman of TUYAD

Dear readers,

We are able to export to Europe with zero customs under favour of our Customs Unions agreement with EU countries. Also, our total technology export is 300 million dollars with 16 new star counties of trade due to African Union.

Discover the Telecommunication sector potency in Turkey. Now, our goverment incentives on especially software and research and development are in progress. Both our non governmental organization TUYAD and regulation are supportive for make foreing investors exist in our country.

We provide complete service to firms which are willing to invest on trade in electronics and electricity sector in Turkey. We will give detailed information about our country and sector when you get in contact with us. We will invite you to our country for make you to be closely acquainted with our country and sector and provide you to negotiate with institutions that you are interested.

We are the rising trade gate of Europe with our young population and workforce. If we as information sector could reach the 15 billion dollars export volume with just our own capacity in the recent year, then we can reach far greater trading volume with the technology firms that we'll consociate.

In our country, logistics and manufacturing sectors are supported by government. If your target is Middle East and Europe, then Turkey is the partner that you are looking for.

Turkey is the technology gate opening to oil and gas-rich Middle East. As a result of partnership between our Chinese partner firms in 2015, 1.4 billion dollars exports were done just in MENA area.

CONTENTS

ISSUE 15 SEPTEMBER 2016

DİJİTAL YAŞAM

September 2016 ▪ ISSUE: 15
ISSN 2149-8636

dijitalyasamder
dijitalyasamdergisi
Available on the iPhone App Store

PUBLISHER
in behalf of TUYAD (Association of Satellite Electronic Communication Business People in TURKEY) Hayrettin ÖZAYDIN

EDITOR IN CHIEF
Mustafa ŞAPŞAP
mustafa@dijitalyasam.org

MANAGING EDITOR
Hayrettin ÖZAYDIN
hayrettin@tuyad.org

INTERNATIONAL COMMUNICATIONS
Hengameh RAYEJI
hengameh@tuyad.org

ADVISORY BOARD
Lütfi BİLGİÇ
Prof.Dr. B.Koray TUNÇALP
Asst.Prof. Uğur KESEN
Asst.Prof. Serkan AYDIN

LEGAL ADVISOR
Advt. Ayşegül OĞUZ

SPECIAL THANKS TO
M.Rüştü KORKMAZ
Abdullah GELGEÇ
Koray HATİPOĞLU
Cenk ŞEN
Sayit BELET
N.Bilge ATİLA
Yaprak ÖZER
Lütfi BİLGİÇ
Çağlar ÇABUK
Yağmur ÖZAYDIN
Gökhan SERT

DESIGN
Homedia
www.homedia.com.tr

ADRESS
Halil Rıfat Paşa Mah.
Perpa Ticaret Merkezi B
Blok K:12 No:2124 34384
Okmeydanı - Şişli
İSTANBUL
0 212 220 07 33
info@dijitalyasam.org
www.dijitalyasam.org

GIVE AN ADD
reklam@dijitalyasam.org

PRINTING
Akform Matbaacılık Ltd.Şti.
Davutpaşa Cd.
2.Matbaacılar Sitesi BA11
No:2 Topkapı / İSTANBUL
0 212 613 12 33

ANFAŞ collabrated with TUYAD for Software Market Exhibition

Anfaş Fair Organisation Company and TUYAD came together in Antalya Expo Center for Software Market Information and Technology Conference and Exhibition in October 06 - 08, 2016.

Murat ÖZER
General Manager
of Anfaş

The collaboration decision was took in the meeting under the presidency of Chairman of TUYAD Hayrettin Ozaydin, President of Antalya Chamber of Hardware Store Metin Sungu and General Manager of Anfaş Fair Organisation Company Murat Ozer for Software Market Exhibition.

The Chairman of TUYAD Hayrettin Ozaydin explained that they will arrange the "Information Renewal Seminar" in Software Market Exhibition in this year.

General Manager of Anfaş Fair Organisation Company Murat Ozer thanked to Chairman of TUYAD and Chamber Presidents for the things that they gave to Software Market Exhibition.

Ozer said, "Information and technologies plays a big important role for the national security of the countries and in our opinion, this importance will increase day by day in the future. When we look at the Participant Profile of Software Market Exhibition and Conference, it could be evaluated as all institutions and organizations that are working with information, technology and the future particularly private sector companies, government ministries, public institutions, universities and Techno Cities.

"Information and technologies plays a big important role for the national security of the countries and in our opinion, this importance will increase day by day in the future..."

Pay Attention to Several Main Steps for the

Success in The Cloud

There are some tricks to benefit from the numerous advantages of the cloud. The attentive institutions about that issue could reach the levels in cloud informatics trip that they target easier and faster. Here, the suggestions of Amazon Web Services for success in this trip.

The institutions are developing new methods for being able to contact with their customers closer service them better by following closely the innovations. Although the budget limitations and difficult project plans, the institutions make effort for doing some innovations transfer to cloud to be able to service their customers better and change and develop the way to contact them.

Each institution's cloud trip is different from each other. We could mention about the advantages like productivity rise that transferring to cloud provides, cost saving and getting easy to develop innovator services.

Amazon Web Services, which is one of the most important players of cloud market, gives information about main things to be done in this trip;

Your IT plans should be compatible with your institution's strategy

It is nearly impossible to determine the most productive areas for using cloud without evaluating main perfections of the institutions. The questions necessary to ask are mainly, Do you have the implementations that need scalability, reliability or security more than provided in current environment? What are your necessities of equipment and band width capacity? Do your implementations yield to substructure that will wax and wane automatically in paralel with your needs? How can the cloud gain favor to IT and targets of your institutions? After the institutions answer these questions, they will be in much more better field for planning a successful cloud strategy.

Choose just one project to start

Don't exaggerate and start with multiplexed projects at a sitting. Firstly, complete the most critical need and create a solution for this. For example, you can start to use cloud services with the projects that will ease the folder sharing and provide the institution's employees work remote and safely. This will be a helpful beginning to take the first step to cloud.

Positioning the correct sources, taking support of corporate governance and collaborate of all team in your project will be effective to lead the project to success. But, get ready to be flexible and examine your improvement in regular intervals. In this way, the institutions will get the success and fast improvement during the development and dissemination stages by starting with the design stage of the project.

Attenuate the scope and test your project as soon as possible

If the project scope has finished nettably, it can cause some troubles within the next process. It will be helpful to be identified the project plan and periods, include the people who can identify the scope in the most correct way, forming the net periods and determine the relationship, passings between periods and draw the net lines of profect for to be able to create the project scope at first.

When the institutions identify and attenuate their project scope, then they will be able to both save time and development and administrative cost.

You can easily augment an implementation that you created for a need's solution with flexible cloud informatics environment.

Create a "Proof of Concept"

After the projects that planned on clouds were evaluated, a "Proof of Concept" should be done for seeing that if the project is practicable financially. Thus, scope of the project should be verified, the forcing points that could show up in development and test stages should be determined.

Positioning the correct sources, taking support of corporate governance and collaborate of all team in your project will be effective to lead the project to success. But, get ready to be flexible and examine your improvement in regular intervals. In this way, the institutions will get the success and fast improvement during the development and dissemination stages by starting with the design stage of the project.

Present a 'practicable minimum scaled service' for productive design

The essential functions of a quickly presented service or a project to the market could be deficient. The solution of this; creating a practicable minimum scaled service and improving this service with the feedbacks form the users. One of the benefits of cloud services is availability of multiplexed versions of a service or a project. This kind of implementation developing and dissemination loop increase the productivity.

Don't forget, crowdsourcing is not just for start-ups

For developing a service of a product, crowdsourcing is not a new concept. The crowdsourcing in modern customer-driven world, became an important tool for finding solutions for corporate problems. Taking advantage of the customers' information and experience that are using the service could help the institutions during the stages of design and developing. These main steps will help the institutions to make use of the numerous advantages of the cloud that includes practice convenience and cost saving.

> Our plans include enhancing the coverage area and spectrum of services by launching the second telecommunications satellite **Azerspace-2** at 45°E in **2017!**

We provide highly-reliable broadcast and broadband solutions in Europe, Africa, Middle East and Central Asia via Azerspace-1 at 46°E equipped with C-band and Ku-band transponders.

For Azercosmos, 2016 is the year when we became the exclusive satellite supplier to all TV channels in Azerbaijan and the year we rapidly grew the Occasional Video business in our domestic market, Georgia and Turkey. Most of our Azerspace-1 satellite is now commercialized and the customer base from over 16 countries include operators from Turkey, Russia, Georgia, UAE, Germany, UK, Ukraine, and others.

Our plans include enhancing the coverage area and spectrum of services by launching the second telecommunications satellite Azerspace-2 at 45°E in 2017 to cover Europe, Central and South Asia, Middle East and, Sub-Saharan Africa.

Azerspace-2 will offer enhanced capacity, coverage and service offerings to support the growing demands in the region for DTH, government and network services currently supported by Azerspace-1.

Telecommunications satellite market is now a very active market segment and once Azerspace-2 is operational and generating revenue Azercosmos is prepared to evaluate other mutually beneficial strategic partnerships.

Telecommunications satellite market is now a very active market segment and once Azerspace-2 is operational and generating revenue Azercosmos is prepared to evaluate other mutually beneficial strategic partnerships.


azercosmos
customized excellence
Technical excellence complemented by customized approach
Meet us at IBC2016
Hall 5, Stand B22

PARABOLIC DISH ANTENNAS

M.Rüştü KORKMAZ
Merih Video

First let's remain that what is parabolic structure.

The definition of the parabol:

Parabol; with a plane taken at a fixed point F from the line K is defined as the focus of points equidistant. If K plane is thought instead of K line, the eternal perpendiculars exited the plane K and the points which are equidistant from point F are forming a paraboloid. Each parabolic dish antennas should be considered as a limited parabolic.

Figure one has been drawn for the parabol.

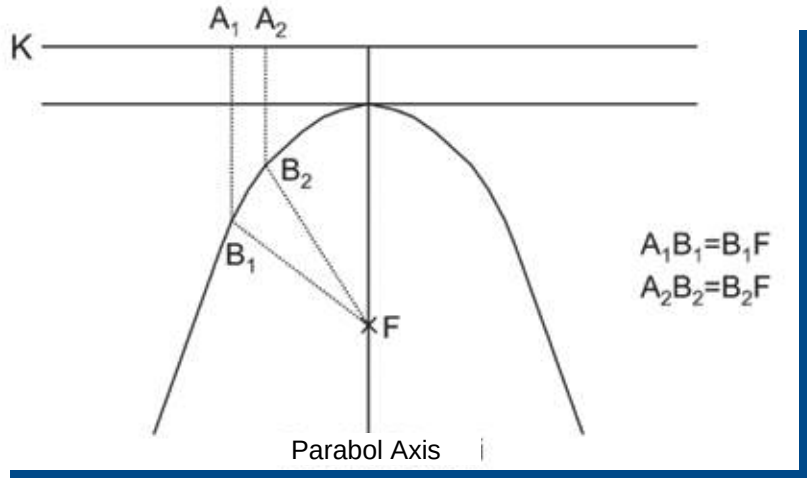

Algebraic formula of a parabol in the plane is:
$y= ax^2+bx+c$ (in the cartesian coordinate system)

A parabol in a plane perpendicular to the axis with the cutting result is obtained parabolic dish antenna.

There is an f/D value which was decided by the designer of each antenna.

When selecting the f/D ratio, the questions are evaluating like the place antenna will be used, antenna gain and receivable sign level.

The definitions:

The diameter of the dish antenna:
D (diameter)

The focal length:
f (focal distance)

The depth of the dish antenna:
d (depth)

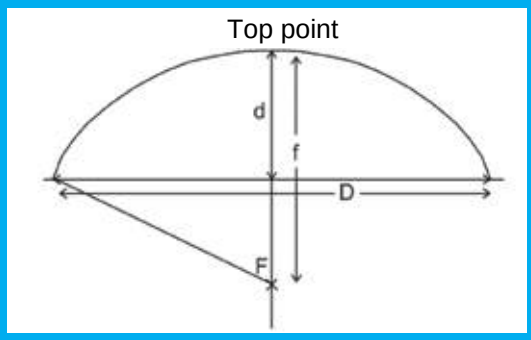

Between the parameters of the satellite dish has the following relationship.

$f= D^2/16d$

Thus, the focal point will be replaced in the formula by measuring the diameter and depth of an unknown parabolic dish antenna and "f" the focal distance is calculated.

The example:

The diameter of the dish antenna=300 cm and d=52 cm.

$f=D^2/16d$.....
300x300/16x52=108 cm
focal length is found.

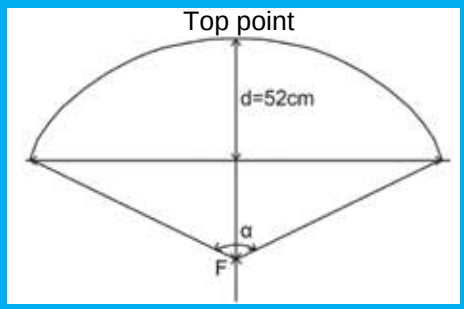

Other example:

D= 400 cm

d= 100 cm

The focal length:?

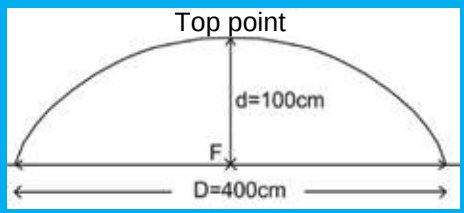

f= 400x400/16x100=100 cm

This is a critical feature on the sample and the focal depth of the antenna is equal to the exit.

f=d=100cm it means that, the focal point is in the point that the axis and mouth plane of antenna intersect.

So, f/D= 100/ 400= 0,25

This dish antenna will be inefficient.

f/D ratio could be 0.25 the most. If it is smaller, the focus can't see the far points of the antenna when being looked to antenna from focus point. Seems like there is an eye in the focus point and this eye will try to see the antenna's survey in 180 degree angle.

The eye looks from focus point should see the antenna clearly. That's why, the degree (alpha angle) of the eye which looks at the antenna shouldn't be bigger than an admissible value. The degree of alpha shouldn't be bigger than 180 degree.

There is an f/D value which was decided by the designer of each antenna.

When selecting the f/D ratio, the questions are evaluating like the place antenna will be used, antenna gain and receivable sign level.

If the antenna will be used in inner city and qualified industrial zone, then the noises are prevented to enter the antenna by selecting small f/D.

In that situation, we will lose from yield. The bigger range of f/D, the more yield.

In our production, f/D range is 0,36. The reason is, the feedhorn's range is approximately 139 degree. If it is calculated from here, f/D=0,36. The feedhorn gives the highest yield as 0,36. The feedhorn that will be used and dish should be approached as a whole and the accounts should be done according to this. If the f/D range of feedhorn isn't equal to f/D range of dish, then some parts of the signals that come to dish don't enter into feedhorn and the yield decreases.

The eye in the focus point should see only all of the surface of antenna. If our eye see the area outside of the antenna then we let the noise come with the signal. Otherwise, we can't see the all of the surface of antenna and we will be using the large antenna in vain.

KA-BAND
satellite broadcasting

Abdullah GELGEÇ
Gessat

Turksat will broadcast from Ka band out of Ku band satellite broadcasts of 4A and 4B satellites. This make the people to be in search of information. Satellite internet, which is a totally new alternative for the users that are not pleased with the speed of ADSL or fibre-optic, is used for the last three years in Turkey. You can find detailed information about Ka band below.

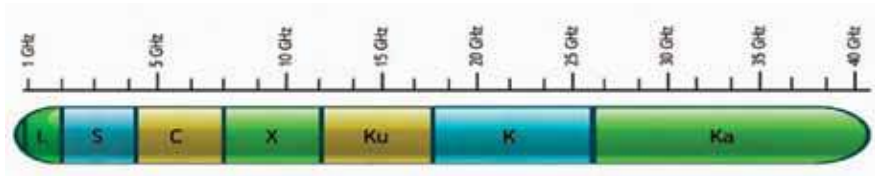

Ka Band is a satellite system supplied by Satellite Operators. The system is using a structure composed by little beams. Because it works in higher frequency, used materials are smaller as size. In the works that the upload speed needs to be high (at least 3 Mbps.) especially like publishing sector, Ka band internet connection comes into prominence. Also, satellite internet is rapid and practical solution in the places that are costly for substructure setup (worksite, pit mining, rural land etc.).

You can enjoy with internet world with your computer over wideband internet service due to too flexible system design.

It is important to have quality equipment of system for broadcast.

It is important to have approved satellite by satellite service provider for trustworthiness of the system.

Ka-Band satellites are based on Multi-Spot Beam technology and this system was designed for presenting wideband services. An average Ka band enables 20 Mbps download and 6 Mbps upload. But, you can have 50 Mbps download speed and 10 Mbps upload speed by using professional modem.

Ka-Band satellites are based on Multi-Spot Beam technology and this system was designed for presenting wideband services.

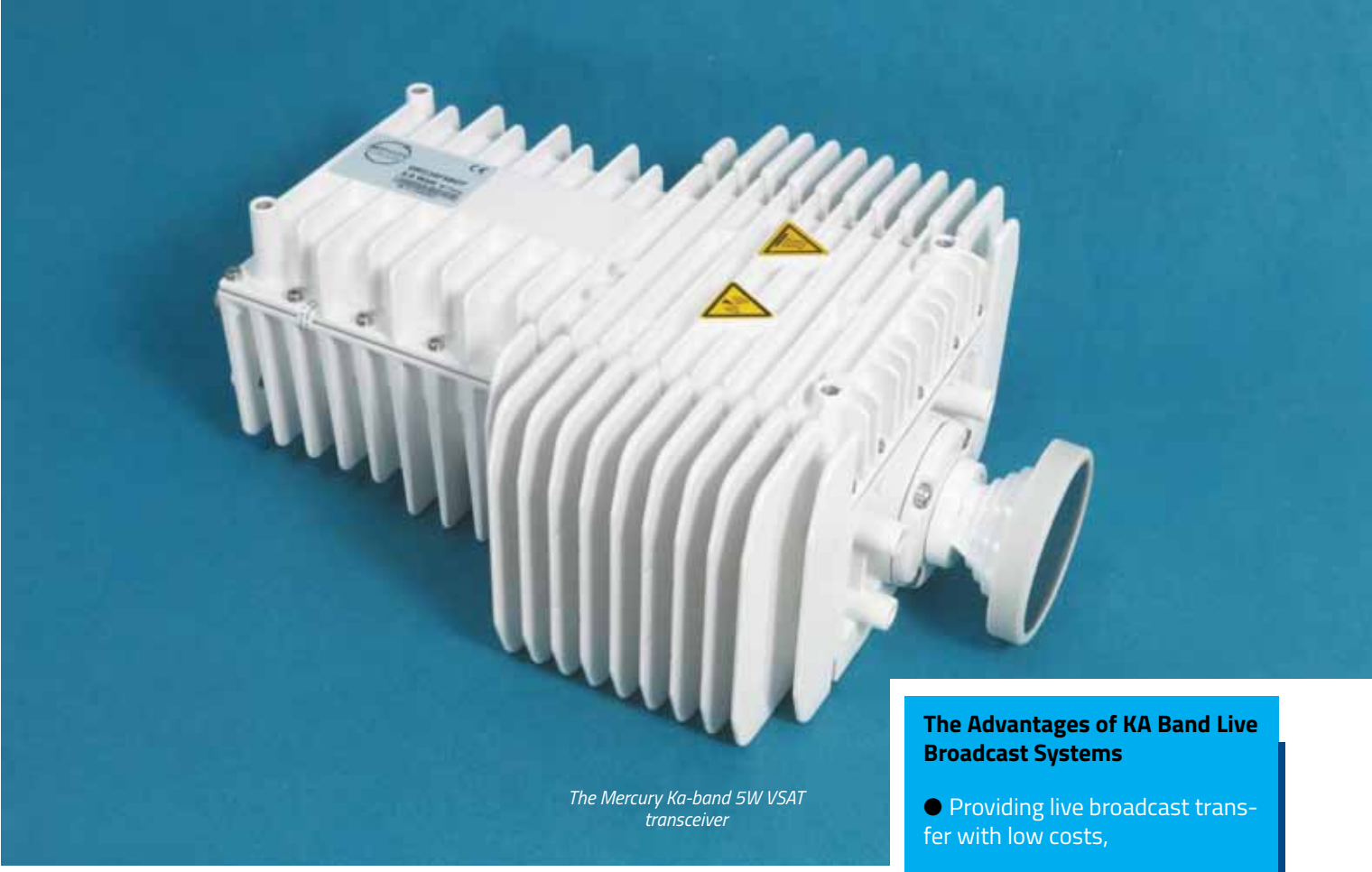

The Mercury Ka-band 5W VSAT transceiver

The Advantages of Ka Band

Low cost satellites and terminals

Availability on any ground

Working with all kinds of energy system

Decreasing the costs in live broadcast systems at the rate of 1/10

Portable and light systems

Adaptability for IP systems

Single-handed responsiveness under favour of high adaptation talent

Workinf of Live Broadcast System

Uplink system

After the data which comes cable-laid or wireless cameras is coded in Encoder, it is sent to Ka band modem and satellite by antenna.

Uplink System Equipments

Encoder, Modem, Inventor (2Kw), BUC, Antenna

Downlink System

The display data which directed from satellite is directly downed to TV center and gave to broadcast streaming.

The error probability in Double-Hop system is less. It can provide the transfer in all conditions due to it doesn't use internet substructure.

The display data which directed from satellite is downed to Gateway center of satellite operator and the display is transfered to TV center over Fiber internet line.

It is a suitable usage in the situation of sending displays to different regions consistently. There could be delays and breakups but it provides a more flexible solution as mobility.

The Advantages of KA Band Live Broadcast Systems

- Providing live broadcast transfer with low costs,
- Presenting high quality service with professional Encoder and Decoder devices
- Providing the possibility of buying capacity to the user
- Bringing more mobility to system because it is able to be integrated with small tools
- There is no need to extra devices like generator because of spen-ding less power
- Compatible working with WEB TV applications because it provides live broadcast over internet
- There is no extra conversion cost- it is a superiority to work integrated with all IP-based devices and systems.

BROADCASTING
establishments & copyrights

Yusuf GÜRSOY
RATEM

There are two sides to 'copyrights' when it's looked from the viewpoint of broadcasting institutions.

Broadcasting institutions are the biggest utilizers of created works, mainly musical and cinematic ones and also the most important medium in putting the said works up for public's use.

Therefore, while looking upon the subject 'Broadcasting institutions and copyrights', it should come in mind both the principals for the payment they are going to make regarding their use of the works in their publications and the rights concerning the broadcast made by the institutions itself.

Law of Intellectual and Artistic Works numbered 5846 (it will be referred as LIAW hereafter) states the basis forthe use of works, renditions and productions by radio and television companies regarding the rights of both the works' creators and performing artists, phonogram producers, film producers who all have related rights.

Assuredly, since it is not possible for thebroadcasting institutions to get written consents from each of the right holders in practice, these consents are obtained from copyrights collectives representing the works' creators and related rights owners, founded upon LIAW 42 within the scope of LIAW 43.

This process which started prevalently in 2001 in our country became a functioning one despite few distresses. That being said, the occasional hindrance caused by the high amount of copyrights collectives operating, the vagueness of rights and with that the contracts, the position of the creators who are not bound to any of the copyrights collectives and the defect on the objection procedure to the rates determined by the copyright collectives, is obvious.

The rights radio and television companies have on their broadcasts, got added to the Law on Intellectual and Artistic Works in 2001 (with a revision in 2004) and is stated at the article 80/C.

With said article, certain exclusive rights regarding their broadcastsgot granted to the radio and television companies.

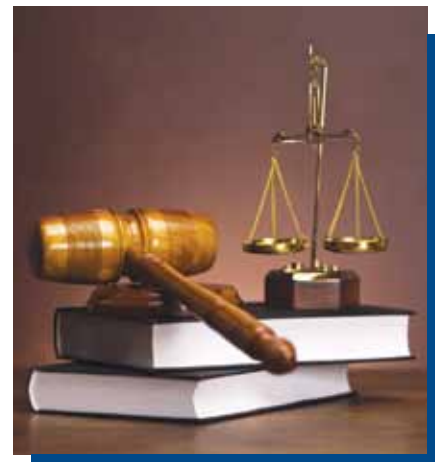

The broadcasting sector in our country is well advanced technically and progressed quite a bit in content creation in the last couple of years and this situation provides great opportunities to works' creators, primarily on music and cinema sectors

We can line these rights up as it follows:

- To allow or deny the confirmation, synchronized transmit of the other broadcasting institution, delayed transmit, re-transmit and distribution via satellite or cable,

- Excluding the personal uses, to allow or deny the direct or indirect reproduction and distribution of their broadcasts with any kind of technic or method

- To allow or deny the transmission of their broadcasts in public places

- To allow the public transmittal of their transmitted broadcasts by means of ensuring that their broadcasts are attainable at the time and place chosen by natural persons.

- To allow or deny the public transmittal or decryption of broadcasting signals directed at them or on telecommunication satellites by a broadcasting company, cable operator or third persons.

As it can be seen above, either type of confirmation and technical reproduction, distribution and transmission of that confirmation is up to the written consent from the broadcasting company.

Since the broadcasting companies have the exclusive right in allowing or denying the 'public transmittal of their broadcasts in public places', said consent in the article is imperative for public places.

LIAW states the manner said right's going to be used (with the other holders of rights) in article 41 with the title of 'The basis of use and/or transmission of works, renditions, phonograms, productions and broadcasts in public places.'

Said article states, 'Public places with or without an entrance fee, sign a contract within the scope of article 52 with either the work's creator or the copyright collectives the creator is bound to and get a written consent to use and transmit the work, rendition, phonogram, production and broadcast and they make the royalty payments accordingly'.

Considering individual enjoyment and pursuance of said right would be difficult for both the broadcasting companies and public places, this right is pleaded by Radio and Television Broadcasters' Society - RATEM, founded 2001 (still the only one on its field) by radio and television establishments.

Another important subject matter for broadcasting companies is the unauthorized confirmation and for that conformation to be put to public's use online. As it is known, the primary source of income for broadcasting companies is the advertisements. It is a huge loss in ad revenue for especially television establishments for their broadcasts, which they produced/got the right to broadcast paying high amounts, to be put online without an authorization. Although LIAW did bring an exclusive regulation like appendix article 4, it is evident that a more severe protection is needed.

To summarize, the broadcasting sector in our country is well advanced technically and progressed quite a bit in content creation in the last couple of years and this situation provides great opportunities to works' creators, primarily on music and cinema sectors. However fort his process to continue, the right granted to radio and television establishments in LIAW without a hesitation needed to be adequately protected.

Lastly, this matter is needed to be stated. There are over 1000 national, regional, local broadcasting companies operating in our country. The continuation of these companies is an essential part of democracy and is also essential for both the works' creators, related rights holders and citizens to use the right granted in the article 27 of Universal Declaration of Human Rights 'Everybody has the right to join the cultural life of community freely, to benefit from fine arts, to join the scientific advancements and to benefit from it.

Türksat Net

is set to Provide High Speed Internet via Satellite

Cenk ŞEN
Türksat

Türksat A.Ş., strives to keep up with the rapid development of Turkey by carrying the communication field to the level it deserves with world standard projects and by investing in various operational fields extending from IT to communication.

Turkey's geopolitical location between Asia, Europe and Africa corresponds with its location in space where the rights to operate the satellite orbital location belongs to Türksat.

As one of Turkey's domestic companies, Türksat A.Ş. has taken its place in the same league as world giants by sending its 7th satellite to space. As of today, Türksat has come to provide 3 billion people in 118 countries with service.

Our four satellites that are currently providing service actively, Türksat 2A, Türksat 3A, Türksat 4A and Türksat 4B, operate at full capacity

The contractual agreement for our national communication satellite, Türksat 6A was signed by our President on December 15, 2014. The software and design of Türksat 6A satellite will completely be domestic and is planned to be completed and sent to space in the year 2019.

Türksat 6A which was developed within the scope of the "National Satellite Platform" will be able to be used in future military and commercial satellites.

The procurement period for Türksat 5A and Türksat 5B communication satellite is ongoing, and within this year their contract will be signed.

In line with Turkey's aim to place among the top 10 economies in the world, Türksat, in its own field, aims to place among the top 10 satellite operators in the world.

Türksat adds strength to our nation's media sector. With Türksat's satellites it allows for our nation's voice to be heard around the world.

As a company with great responsibilities at hand, we are going through proactive period where several projects are being commissioned involving our new satellites.

Within this scope, our company's new communication service Türksat Net, will provide uninterrupted high speed internet services anywhere within the coverage area to individual users.

In line with our goals for the nation's centennial in 2023, we are carrying our abilities to the next level in the satellite technologies, IT and cable broadcast field.

Cenk ŞEN
Türksat CEO

Türksat adds strength to our nation's media sector. With Türksat's satellites it allows for our nation's voice to be heard around the world. As a company with great responsibilities at hand, we are going through proactive period where several projects are being commissioned involving our new satellites.

Türksat Net, will be provided through the Ka frequency band located on the Türksat 4B communication satellite. With small antennas measuring 74 cm internet access will be made available at 25 Mbps.

This way high speed internet access services will be provided to areas where there isn't any terrestrial communication infrastructure, especially to places like schools, hospitals, military compounds, and worksites.

Türksat Net will meet emergency communication needs by acting as backup to the terrestrial communication systems that may be damaged during disasters like earthquakes and floods.

When it comes to service, not only is it offered in Turkey but also in Europe, Africa, Middle East, and Turkic Republics.

On the ground steel bridges, railways and highways connect with one another. In the sky aircrafts and satellites connect with one another and in an electronical environment communication networks connect people with one another.

Türksat continues to make contributions to this. Not just in satellite services, we continue our success in IT and cable broadcast like fields, like that with our e-Government portal.

In line with our goals for the nation's centennial in 2023, we are carrying our abilities to the next level in the satellite technologies, IT and cable broadcast field.

What is this HDR (High Dynamic Range) and UHD PREMIUM

Sayit BELET
Kızıl Electronics

Firstly I will try to explain how we came to this point and what changed from past to today in my article.

You may have heard the terms like RGB, YUV, MPEG. Before mention about these subjects, let's start with the eyesight in human. As you know, the display consists of the points cluster on a matrix. Every point is expressed with a color. The colors consist of two ways in nature: reflection and radiation. All the colors that we can see are obtained with mix of three colors. These main colors red, green and blue.

There are two types of cells in the eye, cone sells and rod cells. Cones are responsible for color perception. There are three different cones: red, green and blue. Rods, are responsible for the perception of objects in low light. These rod cells allows us to see on dark environments.

RGB

Means, red, green and blue.

There are chipsets in computers for make them form the displays. Today, it is the job of display cards. A display card can produce 256 different shades of the three primary colors. It means, 256 x 256 x 256 = 16.777.216 colors. They are named as True Color.

There are chipsets in computers for make them form the displays. Today, it is the job of display cards.

YUV (Y = Light Intensity, UV = color)

It is the format that is used as an alternative for RGB. YUV approaches light intensity and color different from each other. In the human eye, light intensity detection has more sensibility than color detection. It is possible to store numbers of bit as different ratio for Y and UV because color and light information are stored separately in YUV. For example, it is possible to save up datas by using less bit than Y for UV.

YUV 4:4:4, YUV 4:2:2 and YUV 4:2:0 express the Y and UV proportion in the squares that forms real picture or video.

In brief, dissipationless for YUV 4:4:4, the detail of UV was fifty fifty decreased for 4:2:2. UV information was decreased as range of ¼ for 4:2:0.

Also, YCbCr and YPbPr indicate data entry or exit in YUV format as digital and analog.

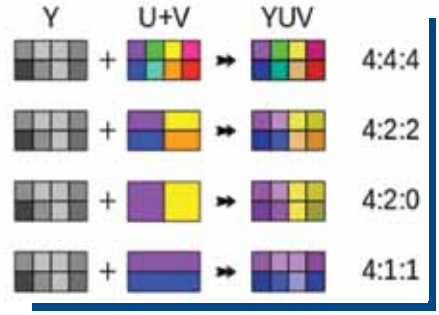

The HD (High Definition) broadcasts are publishing over the determinated protocol with DVB-S2 standard. HD means 1280x720 and Ultra HD means at least 3840x2160 broadcasts.

JPEG and MPEG

Jpeg is the name of professional algorithm used for compress the still images, mpeg is the moving one. MPEG 1 – the first version which launched at the beginning of 90s. As long as the resolution of the videos that are using in increasing, the necessity of more effective algoritms caused MPEG-2 (h262), MPEG-4 (h263), MPEG-4 AVC (h264) ve HEVC (h265). Each of these algoritms provides 50% more effective compression.

DVB (Digital Video Broadcasting)

Data transferring consists of by sending swiftly.

Each protocol has substantial format and definitional part. Substantial format identifies that the data will be transfered over what. The definitional part expresses that packaging form and size of data.

Many protocols are bidirectional. This means that two points can transmit the data each other. Especially when errors are detected by the receiver while transmitting data to the sender informing may be provided to retransmit erroneous data.

DVB is one-way. The end user can just take the data that came from satellite. It can't send any data and transmit the errors.

DVB protocol uses wireless. It uses the MPEG-TS format. Original with digital video and audio data is sent via satellite to analog in certain frequency ranges. This digital-to-analog encoding process is called modulation. The satellite signal from the LNB to the end user on the device, in part, be re-called digital tuner. This process is called demodulation. At this point, the device will stream MPEG TS format.

Mpeg TS enables the use of a single stream of video and audio data in a specific format. So this way it is possible to monitor multiple channels on the same frequency.

Before reaching the receiver publications we use in our homes goes the stages, let's take a look.

Stages can be summarized as follows: Studio -> Transmission -> Satellite.

Studio: We can generalize as environment which the cameras record.

Transmission: The place that where the broadcasts are sent to satellite.

Satellite: It sends the broadcasts that came from transmission to earth periodically.

The HD (High Definition) broadcasts are publishing over the determinated protocol with DVB-S2 standard. HD means 1280x720 and Ultra HD means at least 3840x2160 broadcasts.

HD broadcasting studio recording in 10-bit YUV side vs. 4: 2: 2 format while satellite 10bit YUV 4: 2: 0 format and sent to the appropriate compressed with MPEG format.

We will continue by telling the "Color Depth" in our next issue.

WHAT IS KA-BAND?
and what is it being used for

N.Bilge ATİLA
Ses Astra

The Ka-band represents the portion of the electromagnetic spectrum from 17 to 31 gigahertz. Currently, Ka-band is used primarily to enable broadband type of applications for both commercial and government customers. Demand for this band is set to grow further as demand for broadband connectivity continues to rise.

Today Ka-band is being utilised to provide broadband connectivity whether on land, sea or air.

Through our newly-acquired company, O3b Networks, it is serving the luxury cruise ship industry as well as various telco operators around the world.

What is the difference between Ka- and Ku-band?

The Ku-band represents the portion of the electromagnetic spectrum from 10 to 17 gigahertz. Ku-band is used for satellite broadcast and for providing broadcast connectivity to enterprises, and increasingly for mobility customers (in the maritime & aeronautical industry) due to its small antennas and favourable propagation characteristics.

SES mainly uses two spectrum bands: Ku- and C-band, and increasingly Ka-band (mainly through O3b Networks although we do have three beams on ASTRA 2E, 2F and 2G) for their geostationary orbit (GEO) satellites. Do note that the O3b Networks Ka-band capacity is also unique as their satellites are not operating from 36,000km away but 8,000km away from the Earth's surface. O3b's MEO constellation of satellites is the first in the world and its low latency capability sets it apart from all GEO Ka-band satellites.

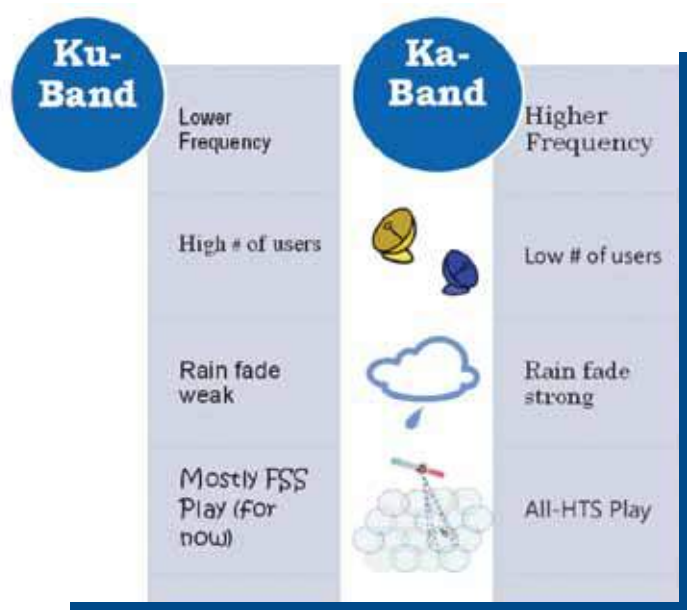

Ka-band is being utilised to provide broadband connectivity whether on land, sea or air.

divine DIGITAL LESSONS

Yaprak ÖZER
İndeks

Turkey lives splendid days from extraordinary attempted coup until now. Althogh we act like everything is ordinary, we can't move away from the circle that wraps us. My articles are also like this; I can't pass the normal situation.

One of the strangeness of attempted coup is communication. What we understand from the communication before coup is to dictate, silence, terminate and close. Under favour of the channels that were closed whenever possible, our routine was broken when turned from coup.

We are living in an environment that suit sociologists, social anthropologists, psychologist and political scientists down to the ground. It is a question if the history will write these days as we feel. In my opinion, it will be different from today. There are so many lessons to take.

What an App!

FaceTime that you call your family and friends free, finished the coup. By the moment that the coup started, the citizen defeated the journalism and trolls, the coup finished. They raided the TV channels, the broadcast was done with phone and coup finished. They entered the cutting room, couldn't close the broadcast, the live broadcast flowed, the coup finished. The putschists communicated by WhatsApp. The coup's code was cleared up by digital communication.

Even we know how important time and speed, we understood these concepts meaning up to the hilt by the attempted coup which means "stop". The aunt, grocer, butcher, their son and daughther and others in the vicinity... They saw the President on FaceTime on TV, listened him several minutes, understood him and went out.

In brief, the coup was blocked by digital communication.

Well then, are we digital society now?

Ali Riza Babaoglan is an informatics professional. Babaoglan worked in Turkey offices of TUBITAK, Microsoft, IBM and SAP. He worked in LinkedIn's Turkey and Ireland offices as Turkey and Turkic Republics Area Manager. And I asked the white whales;

What is digital citizen, what are the characteristics of it?

It is possible to describe it as "The people who are following the developments from phones instead of

Even we know how important time and speed, we understood these concepts meaning up to the hilt by the attempted coup which means "stop". The aunt, grocer, butcher, their son and daughther and others in the vicinity... they saw the President on FaceTime on TV, listened him several minutes, understood him and went out.

TVs". I'm also in this group. Y and Z generation are in this group,too. There is a transfer from Z generation substantially.

What is the difference between digital citizen and normal citizen?

This group's considerations are different, because their world-perceivings are different: it is possible to classify them under the names of speed, flexibility, transportability, transparency and productivity. Our habits are changing in "new world", fastly.

What are the behaviours of digital citizen?

They are faster, more reacting, more interrogator. Digital citizens are accrediting 140 characters messages, 3 minutes videos and witty pictures instead of address to the nation or columns. The rising generation trend is this.

Describing the group follows the developments from Tv as "traditional" and the one follows from mobile device as "digital" isn't a generalisation?

True, but the first step of digitalization is to accept that two worlds aren't different from each other. If you still wait for footnote to verify on TV even you hear something from Twitter, then you are not a digital citizen yet. I'm not talking about intentional and distortional topics.

Source: www.icerikfabrkasi.com

What is digital state?

Digital state means that a state which can answer the rising generation's needs. For this, state should be one step ahead from their citizens. There are some examples as Canada, Ireland.

Where is Turkey in digital state concept?

We evaluate the subject as e-state, yet. The approach is true but it is time to create new services.

Can preventing the attempted coup over mobile phone and social media make us to get promotion to digital citizen?

The spread power of digital is unbelievable. If the speech would issue on a TV channel, it can't reach that much people. If the digital field is used properly, we can form serious benefits in social events.

How much of the communication are traditional and digital in Turkey?

In Turkey, the amount of the people who can't go online is more than the people who can. In large part of media is traditional. In any case, our usage in socail media is pretty good. In that point, we can say that Turkey is being digital fastly.

First step of digitalization is to accept that two worlds aren't different from each other. If you still wait for footnote to verify on TV even you hear something from Twitter, then you are not a digital citizen yet. I'm not talking about intentional and distortional topics.

How do you comment the Turkey's traditional dijital face?

Digital channels are just a part of communication. In Turkey, the Street is traditional substantially. There are so many cause like culture, demographics.

How to be described the digitalization's economy and future?

It has a serious economy; the sufficiency of substructure and superstructure is important for show up the economic values.

The government has serious data, they are not accessible and usable on demand. EU is working on the concept of Open Government. The truest thing is to provide citizen to reach datas safely. Rogatory and active citizen is important with lighter, transparent, accessible government structure.

a new VSAT Transceiver for KA-Band

Lütfi BİLGİÇ
TTM Academy

A new family of GaAs MMICs from TriQuint Semiconductor is designed to help Ka-Band ground terminal manufacturers support this emerging market. TriQuint's high-performance, functionally-integrated products offer easy-to-assemble, cost-effective packaged solutions for VSAT RF requirements.

TriQuint Semiconductor has long supported satellite communications with GaAs solutions, including amplifiers and control products for orbital payloads as well as VSAT devices in commercial and defense programs. TriQuint leads the orbital payload market with more GaAs devices aloft than any other provider. Long known for its amplifier solutions, TriQuint has introduced a complete RF chipset for Ka-Band applications including a variable-gain driver amplifier, 1 W MMIC amplifier, sub-harmonic upconverter and a block downconverter. All four VSAT Ka-Band products use TriQuint's GaAs PHEMT process and are housed in standard QFN packages. A typical lineup is shown in the Figure 1 block diagram.

With the increasing number of Ka-band High Throughput Satellites (HTS) coming into service, there is a growing need to provide affordable solutions for compatible ground terminal equipment. To be competitive, these need to offer a rich feature set, great flexibility, increased power, and high reliability to serve both enterprise as well as government applications.

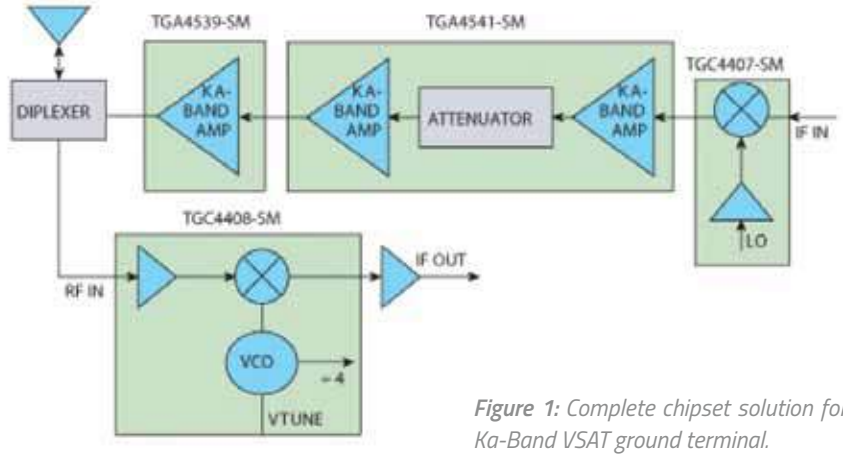

Figure 1: Complete chipset solution for Ka-Band VSAT ground terminal.

"High throughput Ka-band satellites have become one of the most important segments of the satcoms industry."

To address this need, ESA supported the development of a next-generation Ka-band transceiver for satcoms terminals. Called Mercury, the ARTES 3-4 activity resulted in a flexible platform that offers a variety of receive (Rx) and transmit (Tx) options to the end user, including switchable frequency bands, electronically switchable polarisation, and additional Monitoring and Control (M&C) settings. Skyware Technologies, based in Manchester (UK), was the project prime contractor. It has now turned the Ka-band technology developed in the ARTES project into a successful product line.

"The Mercury project has benefitted Skyware both from an engineering perspective and a commercial perspective," says David Geen, VP Business Development at Skyware. "On the engineering side, it has extended our capabilities through the implementation of higher RF powers (5W now with 10W in the pipeline), wider bandwidths (2GHz at Rx and 2GHz at Tx), flexible integration methods, and more feature-rich M&C. On the commercial side, it has allowed us to expand our customer base to include key industry players who now act as value-added resellers for our new range of Mercury-based products, such as the ATOM FlyAway terminals."

The new transceiver is now in production, and according to Skyware hundreds of units have been shipped for applications that include Inmarsat's Global Xpress, Athena Fidus, and other regional satellite network platforms. "The technology developed through the Mercury project is finding its way into a range of new products, allowing us to address different market sectors with innovative features and capabilities," says David Geen.

"High throughput Ka-band satellites have become one of the most important segments of the satcoms industry." says Enrico Lia, microwave engineer and Mercury project supervisor at ESA. "It was critical for the competitiveness of the European space industry to have strong offerings in this market. The technology from Mercury supports comms on the move, comms on the pause, manpack as well as fixed systems. Its flexibility is key for these new systems."

ATOM 65 FlyAway with integrated Mercury transceiver

is "institutive excellence" an utopia?

Çağlar ÇABUK

One of the two constitutive components of the organizations is the system and the other one is individual. Such that, if we approach the subject in terms of the metaphysic, a deep discussion can be started about which one created the other one. The subject that i want to come up for discussion is, if the sustainability of the structures will be possible which have the employees that are happy to being in each stages in an organization, the processes are operated like clockwork and for the good of the components.

We can see the sustainability mean that being exposed with an artifical climate environment under the name of "innovation" and "alteration".

As a part of my job, I may witness to examples of artifical climate during the need recognition meetings before start to education and development practices. I liken the programmes which are proudly told by institution directors and seem as finished on paper to series and competitions of today's Tv world. In these kinds of environments, the participants enjoy when they consume and continue to demand.

On the side of human resources and as instructor, coach and evaluater, I can say; none of the system's sutainability isn't possible which doesn't involve their employees to their processes. It is able to determine that what the corporate culture is, how

The adoption affected by all elements change, adoption, implementation and be a spokesman of the change allowing reveal themselves all team members, democratic, progressive, made possible by a leadership style based on ethical principles and values.

to be transfered and lived from the language, manners. So, things should be done more than "Casual Friday" or "Happy Hours".

"Organizational development" is described as:

Human owned by a corporation, technology, processes and corporate culture integrally and examined in the interaction, that ensure the organization to be more efficient and improving the organizational climate is to aim to create a better environment for employees.

It is very true. The institutions bear responsibility for their shareholders as customers, society and environment on the purpose of reveal that they aren't existing just for made their shareholders gain. Because, the current culture reverberate to shareholders by way of external employees and it functions as an important parameter of reputation management.

We come face to face with alteration chance and menace in a process of organizational development. Let's write down that every alteration process don't bring with the development, without forgetting the relativity of alteration. Being ready fort he change is an essential truth for the institutions, till doomsday. The alteration make necessary the cultural integration, which is the hardest one to manage.

Depending a long-termed and meaningful plan, approaching the institution and all shareholders as a whole and forming a structure suitable for measure the inputs and outputs are the main features of organizational development for institutive excellence.

The way of managing conflict between employees, presence of psychological or sexual harassment, sanctions affecting the oranizasyonel development practitioners among dynamics. Principles are not violated for no one prepared to cope with the crisis, its impact on the workers of the leaders at all levels, ethical leadership approach, the institution that directs the objectives, the main elements that strengthen the solidarity and cooperation.

Managing an alteration process which will creates total benefit and includes all shareholders is something that the perfectionist institutions are trying to do. The adoption affected by all elements change, adoption, implementation and be a spokesman of the change allowing reveal themselves all team members, democratic, progressive, made possible by a leadership style based on ethical principles and values.

Well, I am again asking after all these words, in your opinion, is "institutive excellence" an utopia?

Source: www.icerikfabrkasi.com

university industry COOPERATION

Yağmur ÖZAYDIN

At the half of the 20th century, the businesses were in quest of innovations and the logistics activities took on a task as snow remover for the corporations with increase in global competition. The necessaries of the everchanging and ever-growing logistics sector are also changing. Therefore, the corporations are organizing their logistics activities according to innovations and at the same time they are in the position of following the trends.

When examined the new trends in supply chain, it seems that some kinds of works are dominating like green approach, reverse logistics, combined logistics, the integration of logistics activities and information technologies, the assimilation of reactive management –not proactive, simple approach, corporate sense works, automatisation orientation.

The importance and greatness of logistics sector increase, also changing the discipline of logistics, evenly. The growth of sector and increase of the departments about logistics made logistics trends important. The establishment of logistics high schools, increasing the lessons about foreing language and logistics and transportation, attempt of technopark and making the agreements between universities and chambers of commerce and industry are the examples of logistics trends.

University – industry cooperation is the complements of systematic works that made for the development of technological, scientific and economic of universities and sector by compounding their current possibilities. In other saying, it is the technological, scientific and economic activities that generated by compounding of the current fund of knowledge in the universities and qualified man power and the current experience and financial power of the industry. University – industry cooperations are short-term as mutual-signed protocols, education agreements, contractual researches and also long-term agreements are available. Technocities, technoparks, joint research centres, research instituties, university research and development consortiums are the examples of long-terms cooperations.

The main reason of university – industry cooperation is the efforts of

The structures like technocity, technopark, incubator that will be the bridge between university and the sector should be augmented and ensured the operation in coordination.

raising the productivity and competitive capacity of the sector. The factors of create the need of university – industry cooperation are economic development, technological advance, research and development works, industrialization, manpower and manpower planning, development planning and higher education. In case of sector could steer the university's targets to its profit, university will be able to take advantage of possibilities of the sector.

The purpose of the work that was done by me is emphasize the importance of university – industry cooperation and research the level of logistics departments in the cooperation. As part of this purpose, the logistics education in Turkey was researched and the relevant departments were examined and their curriculums were contrasted. The importance and benefits of university – industry cooperation was explained in the other departments. The survey that created the methodology of the work was answered by cautionary faculty members in relevant departments and analyzed with SPSS (Statistical Package for Social Sciences) 22.0. Thus, the perspective of university – industry cooperation and the stage of the works were showed by meeting with experts. The universities as the focal point of the work are involved the viewpoints, works and responsibilities in the subject of university – industry cooperation.

Evaluation results of cautionary faculty members in logistics departments are,

The cautionary faculty members in logistics departments are thinking that university – industry cooperation is important but they indicate that the works aren't enough.

When the answers of the second part of the survey that the suitability of programmes of instruction and university – industry cooperation was examined were evaluated, it seems that the single connection between programmes of instruction and sector is compulsory practical training.

The answers of the second part of the survey that contains the works of university – industry cooperation show that the relationship between logistics sector and the universities is limited with program of seminars.

When the results of the research was evaluated in general, it seems that there is a very restricted cooperation between logistics sector and universities about logistics and this cooperation can't go beyond the point of internships, seminars and club activities.

The suggestions for the development of university – industry cooperation are,

By providing the connection between university and sector, forming a governing structure that will realize the coordination. The said construction should do some works that will go to the innovations in course content and programmes of instruction by determining the changing necessities of the sector.

Encourager regulations for university – industry cooperation and support programs should be increased.

The structures like technocity, technopark, incubator that will be the bridge between university and the sector should be augmented and ensured the operation in coordination.

the future of the OTT APLICATIONS!

Gökhan SERT
Business Development

OTT (Over The Top) is a new and growing markets on the internet. Many service providers are directed to the widespread use of the internet and internet connection diversifying methods of distributing content through OTT considering. OTT delivery method basically made with equipment to end users through internet content (PC-phone-tablet-settopbox-SmartTV-game consoles) is based on the delivered safely.

Voice over Internet Protocol (VoIP) works with technology OTT (Over The Top) in applications (Viber, Skype, Tango, Line, TIC-TOC, WhatsApp, etc.), allowing the transmission of data over the Internet network VOL- SMS / MMS and video services provide the capacity for with our country as well as worldwide prevalence also increases day by day. In particular, the use of smartphone penetration increases, increased extensivity and OTT applications is increasing.

Mobile terminal devices with the number and amount of employees use such applications connecting to the Internet network increases mobile SES, SMS / MMS, and thus their impact on market data also are becoming more apparent. For example; WhatsApp, Viber, such as messaging and speech focusing on traffic OTT applications with mobile voice and especially SMS / MMS revenue of the market in significant reductions have been observed.

Mobile terminal devices with the number and amount of employees use such applications connecting to the Internet network increases mobile SES, SMS / MMS, and thus their impact on market data also are becoming more apparent.

In addition, it increases in infrastructure costs made by operators in the mobile Internet traffic growth. The increased use of OTT applications that reach end users via the Internet, together with the increase in mobile Internet traffic, competitive conditions, the country's economy, creating serious impact on public safety and consumer rights. OTT services need to be regulated in the same manner as in any regulatory and supervisory is not subject to the rules can compete with the mobile communications sector of these applications to ensure the sustainable investment environment is threatening the ability of the industry products and services.

OTT applications, service providers are not subject to local tax system. Service, even if they have given to the border with Turkey in the Turkish consumer tax does not apply to this country's economy. Due to investment and operating costs is too low to have built-in license service can give for free to consumers. There is no chance of entering the country's economy in the application of ad revenue.

The increase in OTT service that allows voice and message transmission does not only create a loss of income. It also records of calls made through these services regulatory agencies (ICTA (Information and Communication Technologies Authority), TIB (Telecommunication Communication Presidency), etc.), the lack of control can lead to a variety of security issues.

> *In recent years, all the OTT services in the world were also included in Smart Home Systems. In Turkey, with the spread on the market of the Far East product is likely the rapid expansion of this sector.*

Phone calls, CDR's (call detail report) and built many customers in overseas confidential information may be displayed by the service provider, or used for different purposes. For example, the Viper VoIP audio applications are mentioned in the contract may use technical or non-technical information belonging to consumers. These applications are telephone numbers, CDR informations and access to information such as the customer›s geographical location and can use this information.

47. article 52 of law 5809 between the consumer and the End User Rights is organized, "The Electronic Communications Sector Regulation Consumer Rights" is determined based on the obligations of licensed service providers. However, Viber, Skype and applications such as Whatsapp, despite giving the same quality of electronic communications services; We sağlamamaktadırlar.biliș guarantee the quality of service provision sector, which is active in the sector in order to meet the ever-growing investment needs and will require the support of all players in profit.

Today, especially in Europe and America, all over the world are discussed in a number of otter is subject to legal liability. For example, in France, a number of studies are carried out to change the tax laws in Germany and the UK. The European Union is preparing to create a broader definition to include OTT by changing the definition of "Electronic Communications Providers" in existing legislation.

Due to the current discussions on network neutrality policy in the US, some prioritization treaties were signed for to continue without disruption of service between OTT and licensed operators. Ensuring proper environment to be carried out in our country of similar agreements must be considered as a policy option.

In recent years, all the OTT services in the world were also included in Smart Home Systems. In Turkey, with the spread on the market of the Far East product is likely the rapid expansion of this sector. In this matter, Telecom firms in Turkey are in preparation.

WHAT IS SMART HOUSE?

Smart home, which can be controlled from a central location, which can communicate with each other, can establish relationships and all this technology, thanks to the residents, more efficient, safer, more comfortable, which is responsive to the needs and defined as homes that offer a life that makes life easier.

The most important point of your home automation system applied in the smart home concept is completely composed in the way you want. Nowadays, to facilitate the home and business and technology to make life easier in activities of daily life has become more widely used. due to advances in technology, fulfillment of works carried out and took shorter duration has also become easier. Today many important applications are performed in the field of automation. systems that are designed to be used in the control of household devices has revealed intelligent building automation systems. The principles of smart home and building automation in a more secure structure to provide more comfortable and cozy spaces.

Smart home concept is used in many different places, but to understand what is truly smart home must first classify houses.

Technological houses can be grouped under three main headings in order of development.

Manageable Houses

Manageable houses are easily controlled by various control systems of existing equipment and systems. So, taking home only command that creates the desired situation at the moment. Such houses among themselves; Which is controlled by a single remote control of all household appliances cases, they are divided into categories such as management control unit houses the state and does not appear to be associated with each of the different instruments.

Programable Houses

These are the houses that can react to the actions that have already entered more people living at home with static programming chain. This software should be reliable for home use. the bad side of the house, is the need to enter a different scenario as a static system when prompted.

Artificial Intelligence Houses

Similar to the programmable homes. But they are more advanced than programmable home. Program-controlled domestic scenario in being prepared with human assistance. This house has the ability to learn. These houses, examining himself, accordingly, are capable of forming their own home settings and scenarios. Currently, there are no examples in Turkey and abroad applied in this context.

Smart Houses For Disabled People

Smart houses are very well thought out alternative to the independent life of older people and people with physical disabilities. Even embedded many smart devices, home helps in the movement of residents and can keep both under 24-hour medical control.

Smart House Control Using the Body Movement

Another way of providing the smart home control is to use the human body movement. There are two types of body movements: natural and artificial movements. Natural movements are meaningless and ambiguous action. But artificial movements can express various meanings using the markings as previously defined.

We will continue by telling the "Home Control System" in our next issue.


"not better, best to become owner..."
Fiber Optic
Satellite Receiver
Multiswitch
Headend
Lnb
Security Camera
Powerbank
Spotcam
Modulator
Next & NextStar
NEXT&NEXTSTAR /
next.com.tr

1. ultra hd
2. ultra detail
3. ultra real
4. ultra live...

SMART

DVB T/C

Full HD

50" LED

SUNNY

www.sunny.com.tr

/SunnyElektronik

ATMACA